C.I.P.	7 mm Rem. Mag.	TAB.	III
		Date	84-06-14
	Country of Origin: US	Revision	02-05-15

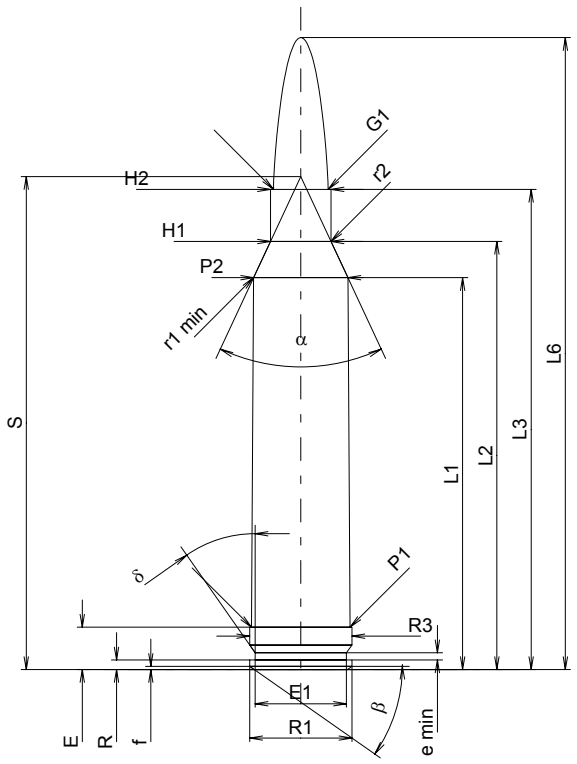

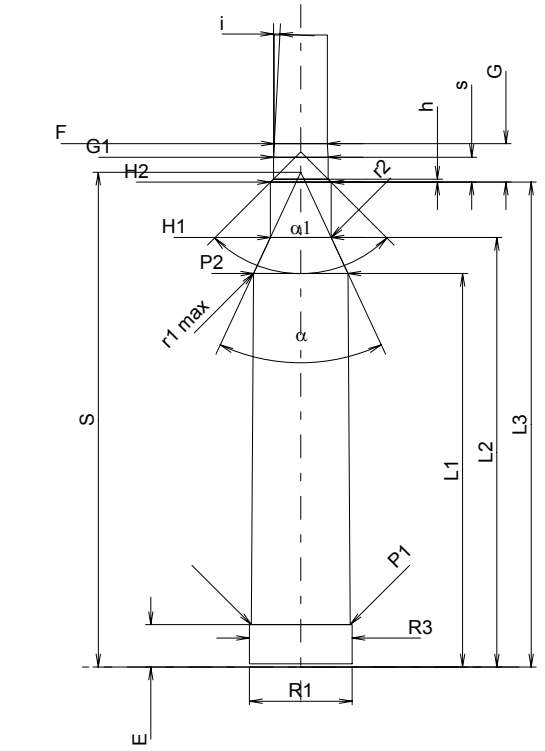

Scale 1:1

CARTRIDGE MAXI

Lengths

L1	=	51.82	
L2	=	56.61	
L3 1)	=	63.50	
L4	=		
L5	=		
L6	=	83.57	

Case Head

R	=	1.27	
R1	=	13.51	
R3	=	13.51	
E 1)	=	5.59	-0.20
E1	=	12.07	
e min	=	0.94	
δ	=	35°	
f	=	0.41	
β	=	35°	

Powder Chamber

P1	=	13.03
P2 *	=	12.47

Junction Cone

α *	=	50°
S *	=	65.19
r1 min	=	1.02
r2	=	3.18

Collar

H1 *	=	8.00
H2 1)	=	8.00

Projectile

G1 1)	=	7.23
G2	=	68.61
F	=	
L3+G 1)	=	68.61

Pressures (Energies)
Method Transducer

Pmax	=	4300	bar
PK	=	4945	bar
PE	=	5375	bar
M	=	25.00	
EE	=	4515	Joule

Miscellaneous Dimensions

Fe 1)	=	0.10
delta L	=	

CHAMBER MINI

Lengths

L1	=	52.03
L2	=	56.79
L3 1)	=	64.11

Breech

R	=	
R1	=	13.59
R2	=	
R3	=	13.59
r	=	

Powder Chamber

E 1)	=	5.59
P1 1)	=	13.06
P2 *	=	12.49

Junction Cone

α *	=	50°
S *	=	65.42
r1 max	=	0.76
r2	=	3.81

Collar

H1 *	=	8.05
H2 1)	=	8.03

Commencement of Rifling

G1 1)*	=	7.23
G 1)	=	5.11
α1	=	90°
h	=	0.40
s *	=	3.30
i 1)*	=	3°
w	=	

Barrel

F 1)*	=	7.04
Z 1)	=	7.21

Grooves

b	=	2.79	
N	=	6	
u	=	241.00	
Q 2)3)	=	40.39	mm²

Dimensions in << mm >>
Dimensions and Tolerances for Proof Barrels
see Appendix CR 1.

Notes:
1) Check for safety reasons
2) Valid only for Proof Barrels
3)
* Basic dimensions

Reproduction forbidden as well as in the form of extracts without approval of C.I.P.